ISS No	MODIFICATION	DATE	SIGN

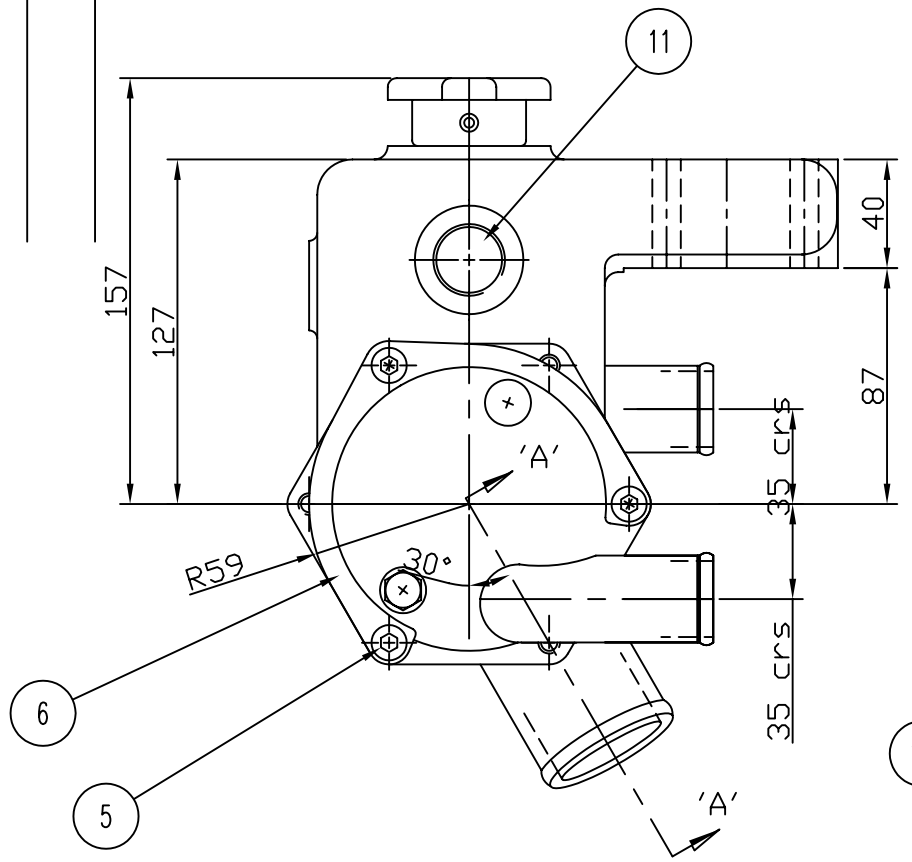

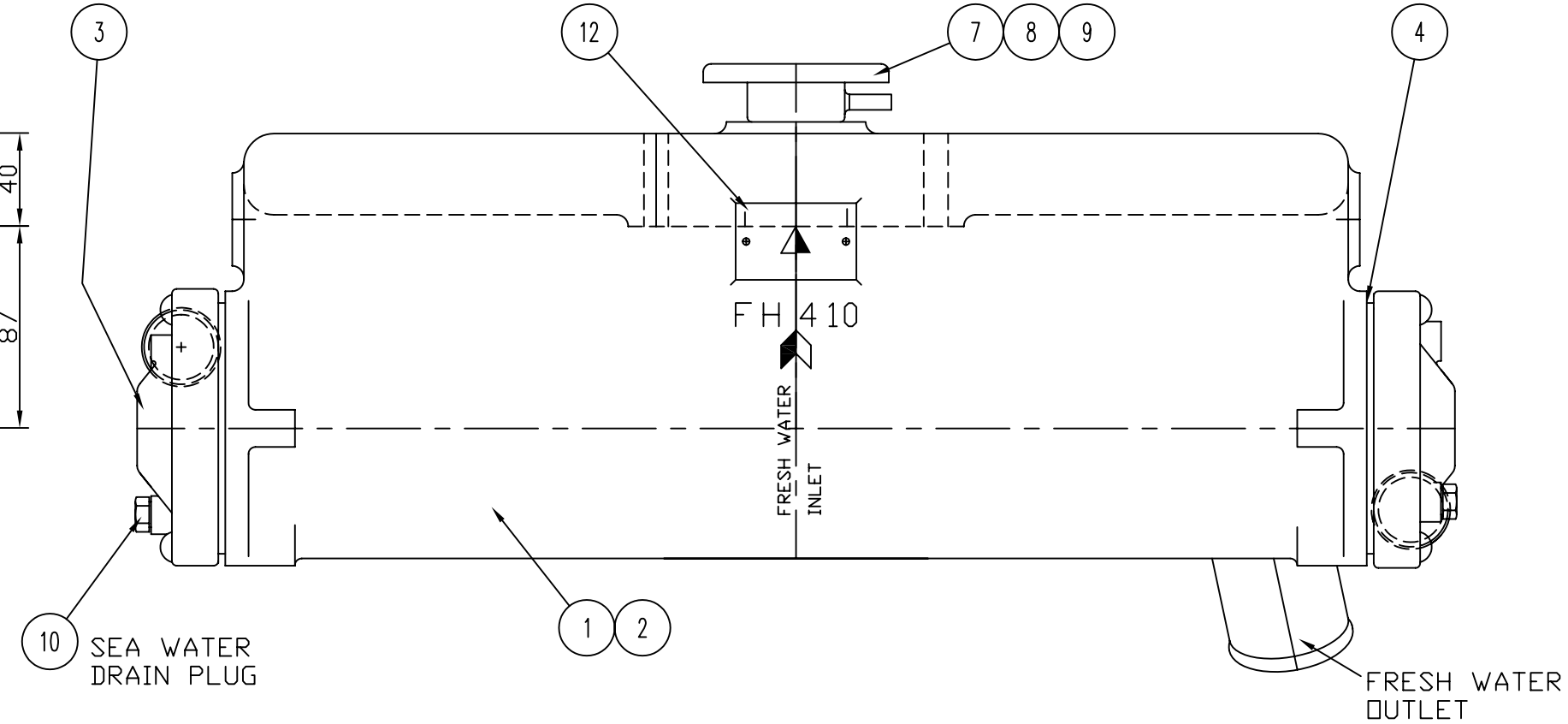

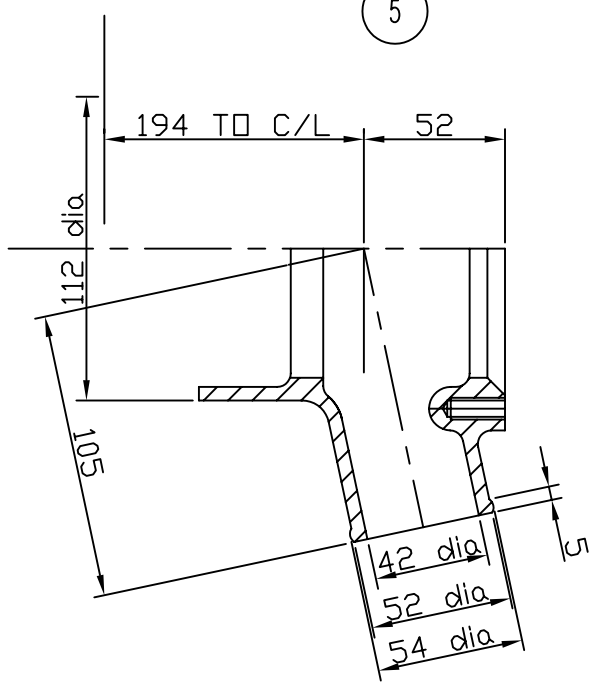

SECTION 'AA'

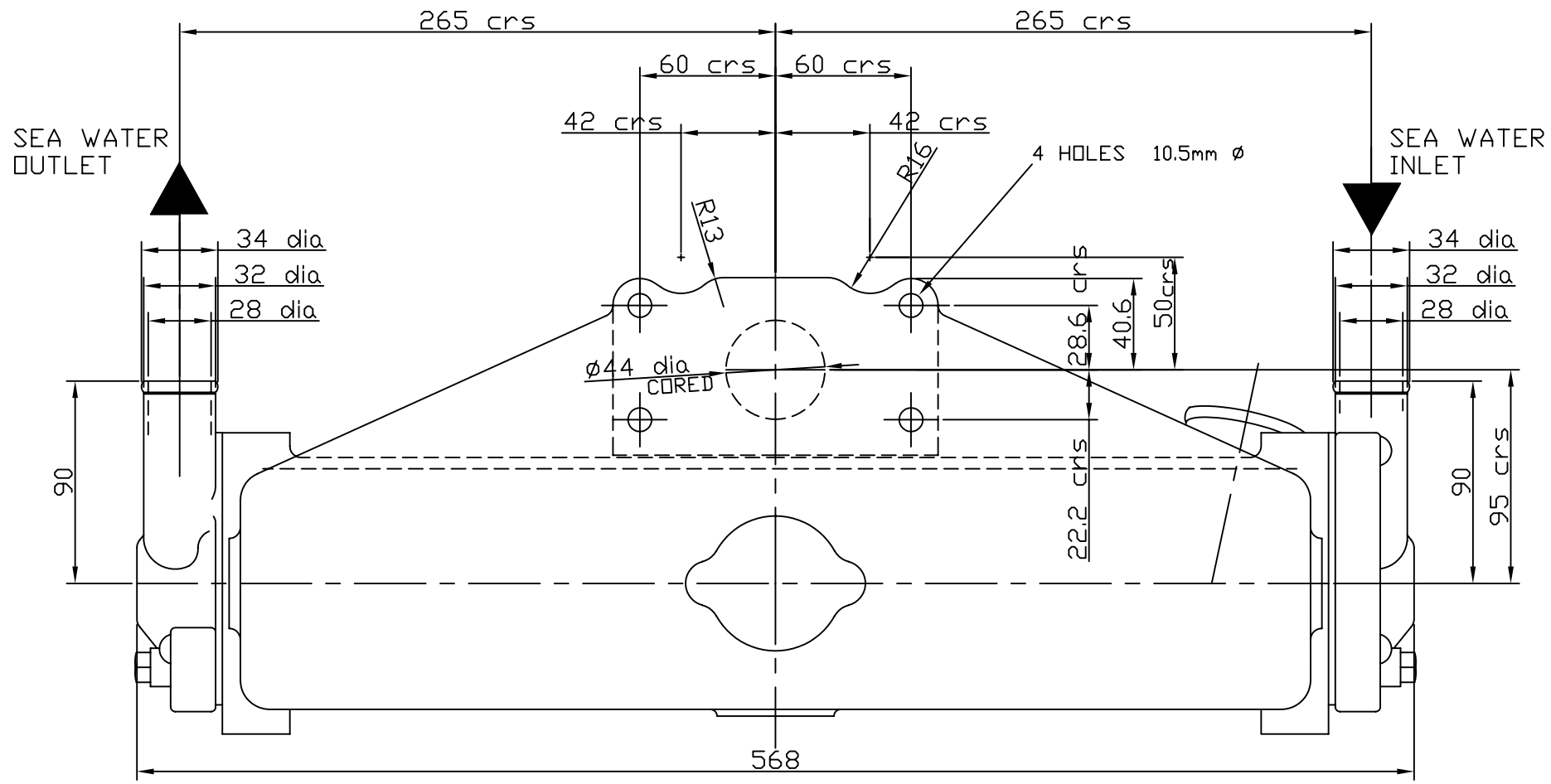

PART No.	DRG No.	No. OFF	DESCRIPTION	ITEM	MAT.
	3594	1	NAMEPLATE	12	BRASS
	3596	2	CORE PLUGS	11	S.S.
1/8"B.S.P.	919	2	DRAIN PLUGS	10	BRASS
	3469	1	FILLER INSERT	9	BRASS
	2755	1	FILLER NECK	8	BRASS
	2753	1	FILLER CAP	7	M.S.
	3436	2	CLAMP RINGS	6	LM6M
	M8x35	6	BUTTON SCREWS	5	M.S.
	OS46	2	SEALS	4	NITRILE
PS18	3093	2	END COVERS	3	N.B.
3445-4TN1B		1	TUBESTACK	2	CN10
PS5	3009	1	BODY	1	LM6M

MATERIAL

BODY ~ ALUMINIUM LM6M

TUBESTACK~ CUPRO NICKEL 90/10 HIGH FLOW

END COVERS~ NAVAL BRASS

ALL DIMENSIONS ARE IN MILLIMETRES

E.J. BOWMAN (BIRMINGHAM) LIMITED
CHESTER STREET
BIRMINGHAM B6 4AP

DRAWN: G. S. BRADLEY	TITLE: HEAT EXCHANGER FOR PERKINS SIX-354 ENGINE
DATE: 25-5-77	
REDRAWN: MARVEN MOULD DESIGN	
DATE: 17 MAR 04	
CHECKED:	
SCALE: FULL SIZE	DRAWING NUMBER: 2986